# TE 541 3D FVZ

for unrebated residential and heavy-duty doors with recessed frames

## Product features

- FVZ = recessed frames
- recessed frames up to 14 mm
- completely concealed hinge system
- for timber, steel or aluminium frames
- for unrebated residential and heavy-duty doors
- sideways closed hinge body for an aesthetically pleasing mortise appearance
- comfortable 3D adjustment (side +/- 3.0 mm, height +/- 3.0 mm, compression +/- 1.0 mm)
- maintenance-free slide bearings

## Quality marks

CE certification

Warringtonfire tested

Certifire certification

IFT certification

## Classification code

EN 1935 / EAD

| | | | | | | | |
|---|---|---|---|---|---|---|---|
| 4 | 7 | 5 | 1 *1 | 1 | — *2 | 0 | 12 |

*1 Test evidence for functional doors to be achieved with full door sets and assemblies.

*2 depending on the finish

## Technical data

| Property | Value |
|---|---|
| Load capacity | 100.0 kg |
| Overall length | 185.0 mm |
| Width (door part) | 28.0 mm |
| Width (frame part) | 28.0 mm |
| Min. door thickness | 42.0 mm |
| Cutter diameter | 24.0 mm |
| Collar ring diameter | 30.0 mm |
| Opening angle | 180° |

22.09.2026 © SIMONSWERK GmbH

Despite the utmost care taken in the preparation of this data sheet, we cannot accept any liability for printing errors or mistakes.

## Notes

The load capacity mentioned above refers to the use of 2 hinges per door leaf (1 x 2 m), for detailed information please look at the chapter technical information.

With an opening position of 180° the door may have to be fixed additionally.

The suitability for fire doors depends on the door construction.

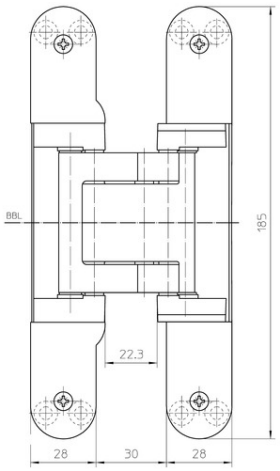


front view

## Installation tools

| | |
|---|---|
| Universal milling frame | |
| Template 5 250682 5 | frame, step 3 |
| Template 5 250942 5 | frame / door, step 1 |
| Template 5 250943 5 | frame / door, step 2 |
| Template 5 250944 5 | door, step 3 |
| Template 5 251169 5 | frame, step 3, without cladding |

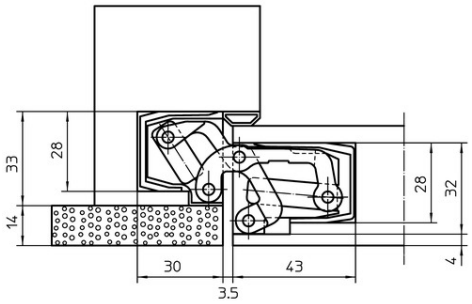


recessed frame facings

## Combinations

TE 541 3D FVZ FZ
TE 541 3D FVZ SZ
TE 541 3D FVZ ST

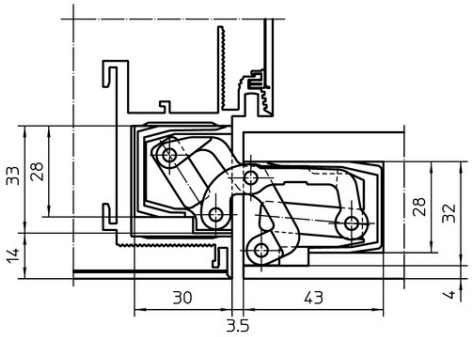


recessed aluminium frame facings

## Function range

fire resistance

smoke resistance

soundproof

## Item versions

| | |
|---|---|
| Finish | Polished brassed (SW |



Despite the utmost care taken in the preparation of this data sheet, we cannot accept any liability for printing errors or mistakes.

| | |
|---|---|
| | 030) |
| VPE | pack of 2 |
| DIN | DIN right and left hand |
| ITEM NO. | 5 400631 0 03002 |
| ITEM NO. (SAP) | 500003829 |
| EAN | 4015471122782 |

| | |
|---|---|
| Finish | Polished nickelled (SW 038) |
| VPE | pack of 2 |
| DIN | DIN right and left hand |
| ITEM NO. | 5 400631 0 03802 |
| ITEM NO. (SAP) | 500003830 |
| EAN | 4015471120047 |

| | |
|---|---|
| Finish | Satin brassed (SW 047) |
| VPE | pack of 2 |
| DIN | DIN right and left hand |
| ITEM NO. | 5 400631 0 04702 |
| ITEM NO. (SAP) | 500003831 |
| EAN | 4015471133658 |

| | |
|---|---|
| Finish | RAL 9016 Traffic White (SW 070) |
| VPE | pack of 2 |
| DIN | DIN right and left hand |
| ITEM NO. | 5 400631 0 07002 |
| ITEM NO. (SAP) | 500003832 |
| EAN | 4015471122799 |

| | |
|---|---|
| Finish | RAL 9005 Matt Black (SW 107) |
| VPE | pack of 2 |
| DIN | DIN right and left hand |
| ITEM NO. | 5 400631 0 10702 |
| ITEM NO. (SAP) | 500003834 |
| EAN | 4015471122805 |

| | |
|---|---|
| Finish | Satin Chrome Look (F1) (SW 124) |
| VPE | pack of 2 |
| DIN | DIN right and left hand |
| ITEM NO. | 5 400631 0 12402 |
| ITEM NO. (SAP) | 500003835 |

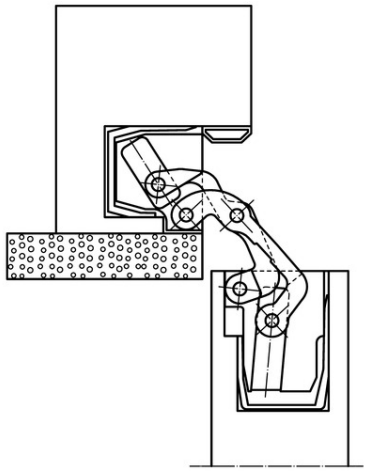

recessed frame facings 90°

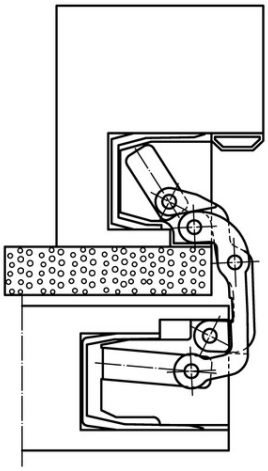

recessed frame facings 180°



Despite the utmost care taken in the preparation of this data sheet, we cannot accept any liability for printing errors or mistakes.

| | |
|---|---|
| EAN | 4015471110130 |

| | |
|---|---|
| Finish | Satin Nickel Look (F2) (SW 125) |
| VPE | pack of 2 |
| DIN | DIN right and left hand |
| ITEM NO. | 5 400631 0 12502 |
| ITEM NO. (SAP) | 500003836 |
| EAN | 4015471119263 |

| | |
|---|---|
| Finish | Stainless Steel Look (SSL) (SW 126) |
| VPE | pack of 2 |
| DIN | DIN right and left hand |
| ITEM NO. | 5 400631 0 12602 |
| ITEM NO. (SAP) | 500003837 |
| EAN | 4015471110147 |

| | |
|---|---|
| Finish | Satin Nickel (SW 144) |
| VPE | pack of 2 |
| DIN | DIN right and left hand |
| ITEM NO. | 5 400631 0 14402 |
| ITEM NO. (SAP) | 500003838 |
| EAN | 4015471122812 |

| | |
|---|---|
| Finish | Satin Chrome (SW 146) |
| VPE | pack of 2 |
| DIN | DIN right and left hand |
| ITEM NO. | 5 400631 0 14602 |
| ITEM NO. (SAP) | 500003839 |
| EAN | 4015471122829 |

| | |
|---|---|
| Finish | Rustic Umber (SW 156) |
| VPE | pack of 2 |
| DIN | DIN right and left hand |
| ITEM NO. | 5 400631 0 15602 |
| ITEM NO. (SAP) | 500003840 |
| EAN | 4015471119423 |

| | |
|---|---|
| Finish | Bronze Metallic (SW 168) |
| VPE | pack of 2 |
| DIN | DIN right and left hand |
| ITEM NO. | 5 400631 0 16802 |

22.09.2026 © SIMONSWERK GmbH

Despite the utmost care taken in the preparation of this data sheet, we cannot accept any liability for printing errors or mistakes.

## TECTUS - TE 541 3D FVZ

| | |
|---|---|
| ITEM NO. (SAP) | 500003841 |
| EAN | 4015471122379 |

| | |
|---|---|
| Finish | Bronze Finish (SW 174) |
| VPE | pack of 2 |
| DIN | DIN right and left hand |
| ITEM NO. | 5 400631 0 17402 |
| ITEM NO. (SAP) | 500003842 |
| EAN | 4015471134044 |

| | |
|---|---|
| Finish | Bronze Finish light (SW 175) |
| VPE | pack of 2 |
| DIN | DIN right and left hand |
| ITEM NO. | 5 400631 0 17502 |
| ITEM NO. (SAP) | 500003843 |
| EAN | 4015471138158 |

| | |
|---|---|
| Finish | Bronze Finish dark (SW 176) |
| VPE | pack of 2 |
| DIN | DIN right and left hand |
| ITEM NO. | 5 400631 0 17602 |
| ITEM NO. (SAP) | 500003844 |
| EAN | 4015471131838 |

22.09.2026 © SIMONSWERK GmbH

Despite the utmost care taken in the preparation of this data sheet, we cannot accept any liability for printing errors or mistakes.